MARINE ELECTRONICS

Build to command the sea

Product Name	**High Current Black Stainless Steel Pushbutton**
Product Series	**Performance Series**
Product Model	**PF19AN-10**

PRODUCT OVERVIEW

The PF19AN pushbutton from the Performance series is a high-current, black (or other color) anodized aluminum pushbutton switch built for demanding marine and onshore environments. With a 19 mm cutout diameter, an IP67-rated front seal, and a robust black anodised aluminum housing, it withstands sustained outdoor exposure while switching up to 20 A. Available in latching or momentary configurations with a choice of illuminated LED ring colors, this is a versatile switch for exterior and interior panel applications.



Designed for marine and onshore applications

- 19 mm cutout diameter
- Different LED colors available
- Black etched or SS316 housing
- Momentary Off-(On) or Latching Off-On
- IP67 waterproof (front side)

DIMENSIONAL DRAWING

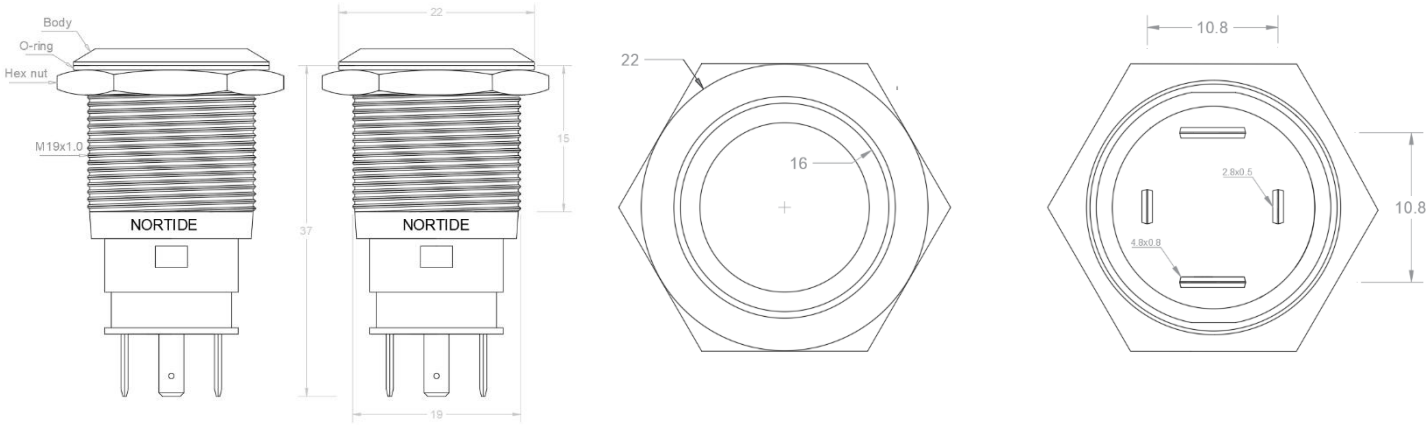

TECHNICAL SPECIFICATIONS

Parameter	Specification
Max. Current (resistive load)	20A
Max. Current (inductive load)	12A
Supply Voltage	12 V / 24 V (or custom voltage on request)
Mechanical Life	More than 50,000 cycles
LED Life	More than 40,000 hours
LED Color	Blue, Red, Green, White, Orange, Yellow
Contact Resistance	50 mΩ
Insulation Resistance	1000 MΩ
Operating Temperature	-20°C ~ +55°C
Button Travel	2.50 mm
Mounting hole diameter	19mm
Product outer diameter	22mm
Max. panel thickness	12mm
Protection Level	IP67 (front side)
Actuation Force	4 N
Output	1x NO (Normally Open)
Mounting Nut Torque	5 – 14 Nm
Type	Latching or Momentary
Material	Anodised aluminum
Button exterior color	Black (or custom color on request)
LED State (Output Indication)	1. Always on 2. Only on when pressed

APPLICATIONS

Sector	Typical Applications
Marine	Exterior switch panels, interior control panels, offshore applications
Industrial	Farming equipment, heavy machinery, CNC Machinery, Industrial equipment
On-shore	RV power distribution panels, car switch panels, kiosks, security devices

PART NUMBER CONFIGURATOR

Function	Switch material Color	LED Color
M – Momentary L – Latching	B – Anodised black R – Anodised Red G – Anodised Green BL – Anodised Blue	W – White Y – Yellow B – Blue G – Green R – Red

For example: Partnumber PF19AN-10-L-B-B means:
PF = Performance Series
19 = 19mm
AN = Anodised
10 = Series product reference
L = Latching
B = Black Housing
B = Blue LED

WIRING DIAGRAM

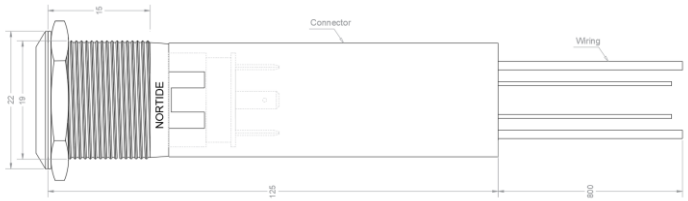

Fig. 2 — Connector pinout: LED +, LED –, Power +, Load

Option 1 — LED On When Pushed

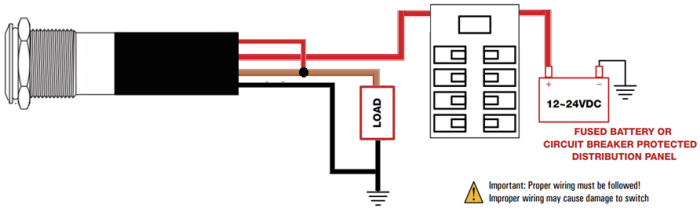

Option 2 — LED always on

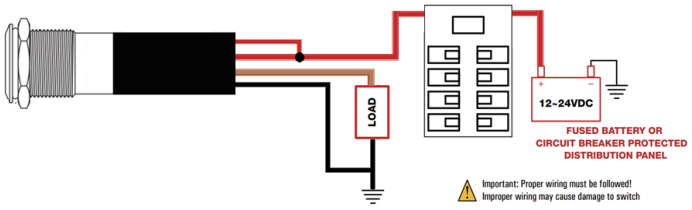

ORDERING NOTES

- Specify function, Material color and LED color per the part number configurator
- Black Anodised Aluminum housing (or custom color on request)
- Supply voltage 12V or 24V DC (or custom on request)
- Recommended installation on a fused or circuit-breaker protected distribution panel
- LED Colors customizable

About NorTide Marine

Nortide Marine focusses primarily in supplyin high-quality electrical solutions for the yachting, marine and industrial industry. We combine marine electrical engineering with a strong focus on reliability, functionality and refined design.

Every detail matters when it comes to a pushbutton. From the materials and construction to the tactile feel of each button, our products are designed to provide a premium experience. A switch should not only work reliably, it should feel solid, precise and satisfying every time it is operated.

Contact

Talk directly to a sales engineer

Phone: +31 6 11663634
Mail: Sales@nortidemarine.com
Country: Netherlands